FLOS

F3752000 Glass

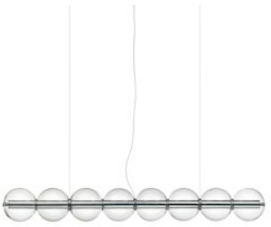

Luce Sferica S1

Designed by Ronan Bouroullec, 2025

110W - 5778lm - 2700K - CRI> 95

Modular suspension lamp emitting diffused light. Horizontal body in polished extruded aluminium with two linear LED sources for upward and downward emission. Integrated touch dimmer enables independent control of light outputs. Body encased in a sequence of hand-blown transparent glass spheres separated by traditional spacers. Can be installed in multiple parallel rows.

Designed by Ronan Bouroullec, Luce Sferica unites craftsmanship with industrial technique. Inspired by the fleeting beauty of raindrops resting on a wire or soap bubbles floating in the air, it crystallises time and play into a luminous body that is light, delicate and quietly magical. An ode to simplicity, Luce Sferica reflects Ronan Bouroullec's ability to instil functional design with emotion, giving form to a sculptural luminaire that is deeply faithful to his poetic sensibility and aesthetics.

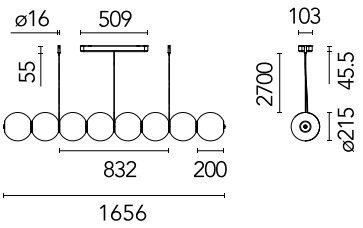

Are you a professional and your project needs consulting and support?

BOOK AN APPOINTMENT

Main specifications

EAN	8059607075685
Mounting	Suspension
Environments	Indoor dry location
Light source type	LED
Light sources included	Yes
LED type	LED Module
Power (W)	110
Lumen Output (lm)	5778

Physical

Colour	Glass
Length (mm)	1656
Cord length (mm)	2700
Canopy length/diameter (mm)	509
Canopy width (mm)	103
Canopy height (mm)	43
Net weight (kg)	10.35
Package volume (m3)	0.46
IP internal	20

Download

Mounting instructions	PDF
Mounting instructions	PDF

Photometric Files

ULD	ULD
LDT / IES	IES

Technical Drawings

2D	ZIP
3D	ZIP

©2026 Flos - P.IVA 00290820174 - 10/31/2026

In our constantly evolving world and business, technical upgrades happen every day. This means all product specifications and data are subject to change without warning in order t improve reliability, function, performance or otherwise. We make every effort to ensure the accuracy of our product images, however due to different lighting and screens used for viewing, the colours may vary. Images are indicative of the quality and style of the product but may not represent the precise details of the product you receive. This is because we are constantly working to make improvements. For aesthetic reasons, cables and/or electrical elements are often not shown. Refer to technical data sheets for all technical data. Images and colours are not part of any contract or warranty in any way.

IP 20

Photometric

Lighting type	Direct, Indirect
Light distribution	Symmetric
CCT (K)	2700
CRI>	95
Extreme cut off	No

Electrical

Insulation class	I
Frequency (Hz)	50/60
Main voltage (Vac)	100-240
LED current (mA)	500
Power supply	Integrated
Dimmable	Yes
Power supply type	Dimmer on board
Dimming interface	Dimmer Integrated

Ecodesign and Energy Labelling

This product contains a light source of energy efficiency class **F**

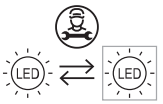

Replaceable (LED only) light source by a professional

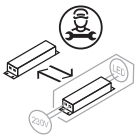

Replaceable control gear by a professional

©2026 Flos - P.IVA 00290820174 - 10/31/2026

In our constantly evolving world and business, technical upgrades happen every day. This means all product specifications and data are subject to change without warning in order t improve reliability, function, performance or otherwise. We make every effort to ensure the accuracy of our product images, however due to different lighting and screens used for viewing, the colours may vary. Images are indicative of the quality and style of the product but may not represent the precise details of the product you receive. This is because we are constantly working to make improvements. For aesthetic reasons, cables and/or electrical elements are often not shown. Refer to technical data sheets for all technical data. Images and colours are not part of any contract or warranty in any way.

Spare Parts

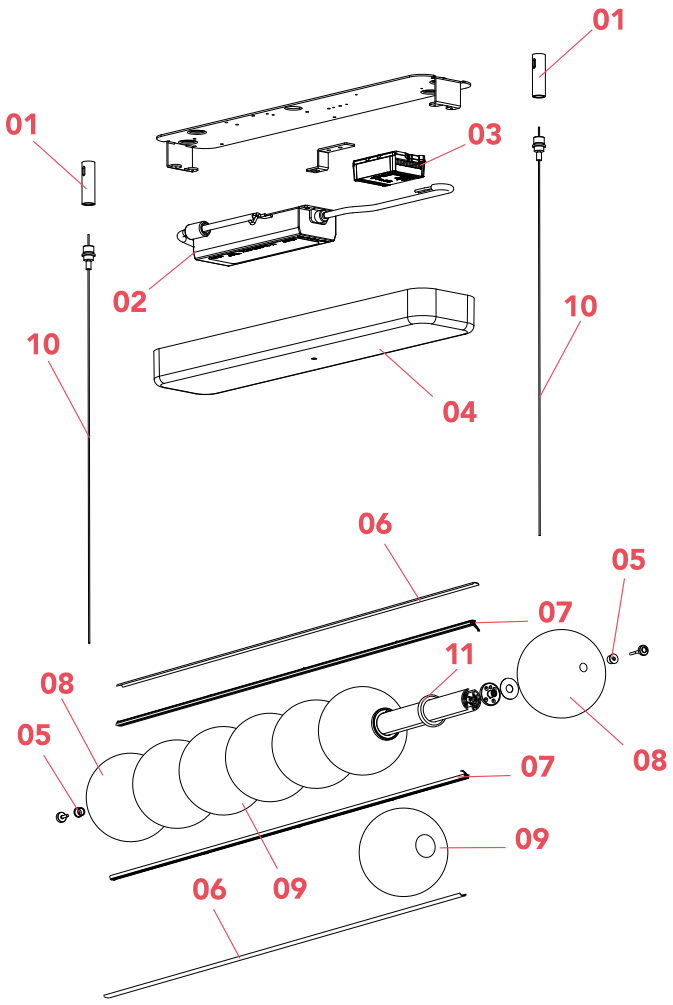

01.	Luce Orizzontale/Sferica/Cilindrica steel wire cable fixing kit	RF3750100
02.	Luce Orizzontale/Sferica/Cilindrica Power supply	RF32976
03.	Luce Orizzontale/Sferica/Cilindrica Ceiling rose dimmer	RF36893
04.	Luce Orizzontale/Sferica/Cilindrica Ceiling rose cover EUR	RF37946
05.	Luce Sferica/Cilindrica Glass closing bushing	RF37580
06.	Luce Orizzontale Suspension Linear diffuser	RF3746500
07.	Luce Orizzontale Suspension 1 Led board	RF3746700
08.	Luce Sferica closed glass diffuser	RF3750600
09.	Luce Sferica open glass diffuser	RF3750500
10.	Luce Orizzontale/Sferica/Cilindrica Ring and 4 meters steel wire cable	RF3746200
11.	Luce Orizzontale/Sferica/Cilindrica 4-piece spacer ring kit	RF39006

©2026 Flos - P.IVA 00290820174 - 10/31/2026

In our constantly evolving world and business, technical upgrades happen every day. This means all product specifications and data are subject to change without warning in order t improve reliability, function, performance or otherwise. We make every effort to ensure the accuracy of our product images, however due to different lighting and screens used for viewing, the colours may vary. Images are indicative of the quality and style of the product but may not represent the precise details of the product you receive. This is because we are constantly working to make improvements. For aesthetic reasons, cables and/or electrical elements are often not shown. Refer to technical data sheets for all technical data. Images and colours are not part of any contract or warranty in any way.



RF3750100

Luce Orizzontale/Sferica/Cilindrica steel wire cable fixing kit



RF32976

Luce Orizzontale/Sferica/Cilindrica Power supply



RF36893

Luce Orizzontale/Sferica/Cilindrica Ceiling rose dimmer



RF37946

Luce Orizzontale/Sferica/Cilindrica Ceiling rose cover EUR



RF37580

Luce Sferica/Cilindrica Glass closing bushing

RF3746500

Luce Orizzontale Suspension Linear diffuser

RF3746700

Luce Orizzontale Suspension 1 Led board

RF3750600

Luce Sferica closed glass diffuser

©2026 Flos - P.IVA 00290820174 - 10/31/2026

In our constantly evolving world and business, technical upgrades happen every day. This means all product specifications and data are subject to change without warning in order t improve reliability, function, performance or otherwise. We make every effort to ensure the accuracy of our product images, however due to different lighting and screens used for viewing, the colours may vary. Images are indicative of the quality and style of the product but may not represent the precise details of the product you receive. This is because we are constantly working to make improvements. For aesthetic reasons, cables and/or electrical elements are often not shown. Refer to technical data sheets for all technical data. Images and colours are not part of any contract or warranty in any way.



RF3750500

Luce Sferica open glass diffuser



RF3746200

Luce Orizzontale/Sferica/Cilindrica Ring and 4 meters steel wire cable



RF39006

Luce Orizzontale/Sferica/Cilindrica 4-piece spacer ring kit

©2026 Flos - P.IVA 00290820174 - 10/31/2026

In our constantly evolving world and business, technical upgrades happen every day. This means all product specifications and data are subject to change without warning in order t improve reliability, function, performance or otherwise. We make every effort to ensure the accuracy of our product images, however due to different lighting and screens used for viewing, the colours may vary. Images are indicative of the quality and style of the product but may not represent the precise details of the product you receive. This is because we are constantly working to make improvements. For aesthetic reasons, cables and/or electrical elements are often not shown. Refer to technical data sheets for all technical data. Images and colours are not part of any contract or warranty in any way.