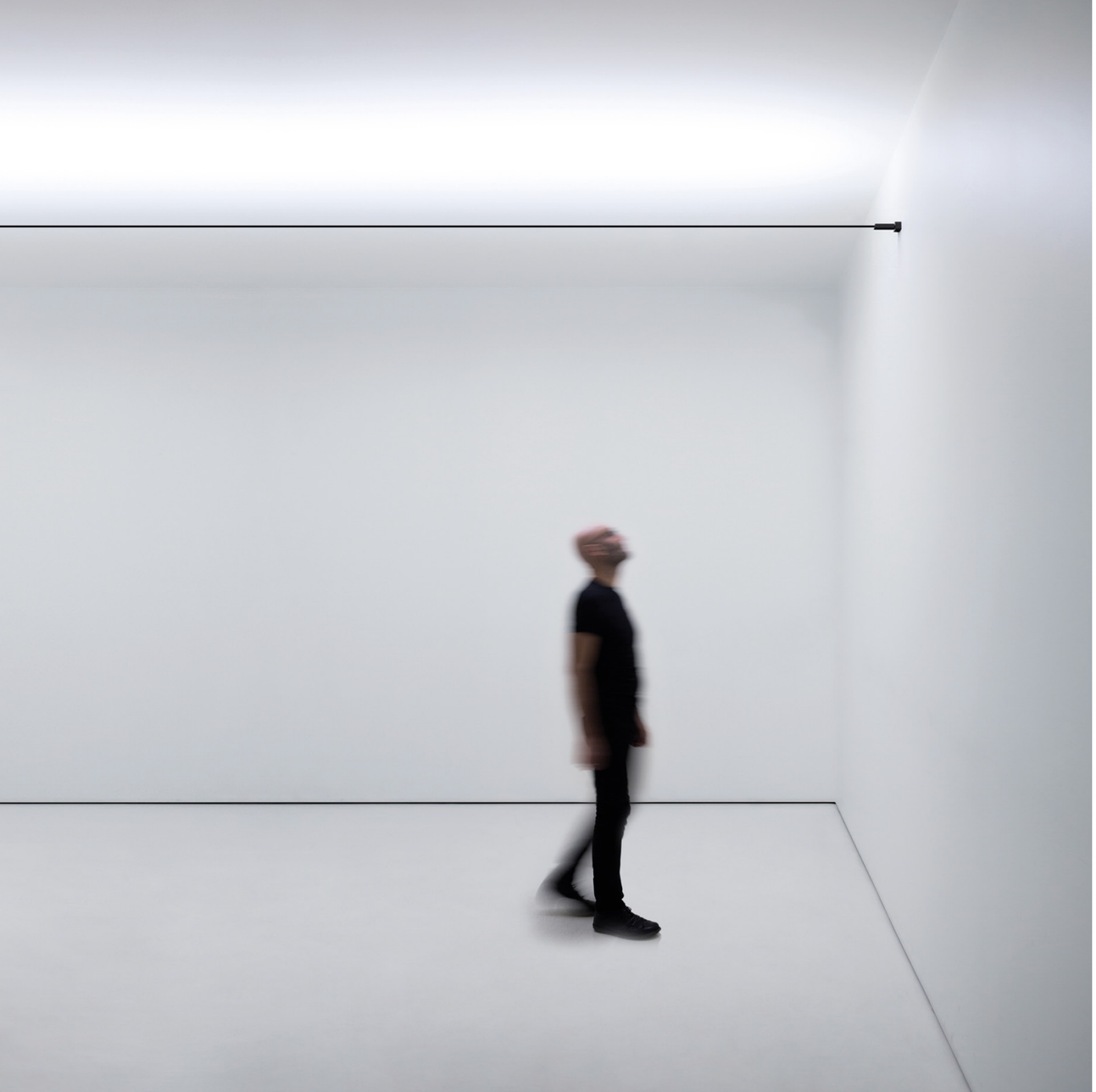

Davide Groppi / 2016

INFINITO

Wall lighting system with indirect light for indoor use.

INFINITO is a spatial concept.
An ultra-thin tape cuts through the space producing an indirect light.
INFINITO breaks down the luminaire, turning it into something else, leaving only a trace, a line and then not even that, just light.

The tape is in AISI 301 stainless steel, is 18 mm wide and can be extended up to 36 m in length (standard measurements 6 / 12 / 18 m).
The adhesive covering tape is in matt black PVC.
The tensioners are in matt black anodised aluminium.
The TW version is available in 5 / 10 m lenghts.

The light source is an 8 mm wide LED strip.
The driver is not included but is available as an accessory.

Sistema di illuminazione da parete, a luce indiretta, per interni.

INFINITO è un concetto spaziale.
Un nastro sottilissimo taglia lo spazio e produce luce indiretta.
INFINITO smaterializza l'oggetto lampada, trasformandolo in qualcos'altro, lasciandone solo una traccia, una riga e poi nemmeno più quella, solo la luce.

Il nastro è in AISI 301, è largo 18 mm e può essere teso fino a 36 m di lunghezza (misure standard 6 / 12 / 18 m).
Il nastro adesivo di copertura è in PVC nero opaco.
I tenditori sono in alluminio anodizzati nero opaco.
La versione TW è disponibile da 5 / 10 m di lunghezza.

La sorgente luminosa è costituita da una strip LED di 8 mm di larghezza.
Il driver non è incluso, ma è disponibile come accessorio.

Finish	**.03**	Matt White	**.04**	Matt Black

Custom finish available on request (wall connection and installation kits only).
Finitura personalizzata su richiesta (solo per attacco da parete e kit di installazione).

INFINITO 6 - INFINITO 12 - INFINITO 18

Davide Groppi / 2016

INFINITO 6

INFINITO 6
1A2250300.27.20
1A2250300.30.20
1A2250400.27.20
1A2250400.30.20

+

SPACER
1A4930300.00.00
1A4930400.00.00

+

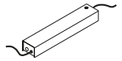

DRIVER WITH PLUG
1X0060300.01.06
1X0060400.01.06

OR

REMOTE DRIVER
1Z1120400

+

CONTROLLER
1Z2170010

INFINITO 12

INFINITO 12
1A2260300.27.20
1A2260300.30.20
1A2260400.27.20
1A2260400.30.20

+

SPACER
1A4930300.00.00
1A4930400.00.00

+

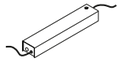

DRIVER WITH PLUG
1X0060300.02.06
1X0060400.02.06

OR

REMOTE DRIVER
1Z1120250

+

CONTROLLER
1Z2170010

INFINITO 18

INFINITO 18
1A2270300.27.20
1A2270300.30.20
1A2270400.27.20
1A2270400.30.20

+

REMOTE DRIVER
1Z1120390

+

CONTROLLER
1Z2170010

The sizes are expressed in millimeters.

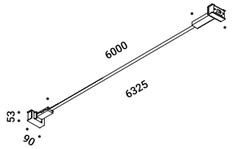

INFINITO 6
55W - 1,43A
48V DC
2700K - 7494lm / 3000K - 7668lm
CRI >90
Driver not included
CE IP20 IE

Matt White - 2700K	1A2250300.27.20
Matt White - 3000K	1A2250300.30.20
Matt Black - 2700K	1A2250400.27.20
Matt Black - 3000K	1A2250400.30.20

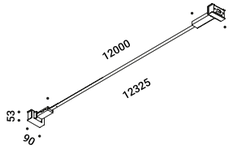

INFINITO 12
110W - 2,86A
48V DC
2700K - 14988lm / 3000K - 15336lm
CRI >90
Driver not included
CE IP20 IE

Matt White - 2700K	1A2260300.27.20
Matt White - 3000K	1A2260300.30.20
Matt Black - 2700K	1A2260400.27.20
Matt Black - 3000K	1A2260400.30.20

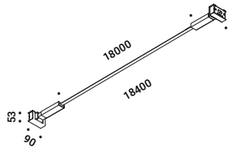

INFINITO 18
165W
48V DC
2700K - 22482lm / 3000K - 23004lm
CRI >90
Driver not included
CE IP20

Matt White - 2700K	1A2270300.27.20
Matt White - 3000K	1A2270300.30.20
Matt Black - 2700K	1A2270400.27.20
Matt Black - 3000K	1A2270400.30.20

INFINITO 5 TW

INFINITO 5 TW
1A4860300.96.20
1A4860400.96.20

+

REMOTE DRIVER
1Z1120240

+

CONTROLLER
1Z2360010

INFINITO 10 TW

INFINITO 10 TW
1A4870300.96.20
1A4870400.96.20

+

2 x

REMOTE DRIVER
1Z1120240

+

2 x

CONTROLLER
1Z2360010

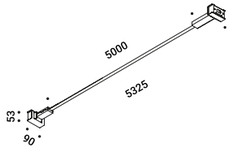

INFINITO 5 TW
Tunable White
96W
24V DC
2700K - 3848lm / 6500K - 4288lm
CRI >90
Driver not included
CE IP20

Matt White - 2700K / 6500K	1A4860300.96.20
Matt Black - 2700K / 6500K	1A4860400.96.20

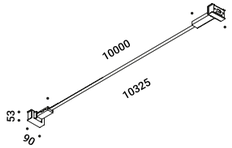

INFINITO 10 TW
Tunable White
192W
24V DC
2700K - 7696lm / 6500K - 8576lm
CRI >90
Driver not included
CE IP20

Matt White - 2700K / 6500K	1A4870300.96.20
Matt Black - 2700K / 6500K	1A4870400.96.20

Compulsory accessories / Accessori obbligatori

Drivers / Alimentatori

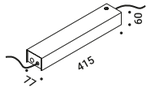

Driver with plug / Alimentatore con spina — Not included

Matt White	Input 100-240V - 50/60Hz Output 48V - Max 80W - IP20 Dimmer on board	INFINITO 6	1X0060300.01.06
Matt Black	Input 100-240V - 50/60Hz Output 48V - Max 80W - IP20 Dimmer on board	INFINITO 6	1X0060400.01.06

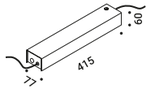

Driver with plug / Alimentatore con spina — Not included

Matt White	Input 100-240V - 50/60Hz Output 48V - Max 150W - IP20 Dimmer on board	INFINITO 12	1X0060300.02.06
Matt Black	Input 100-240V - 50/60Hz Output 48V - Max 150W - IP20 Dimmer on board	INFINITO 12	1X0060400.02.06

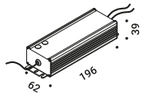

Driver / Alimentatore — Not included

100-240V	48V/80W/IP67/1-10V	INFINITO 6	1Z1120400

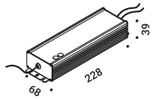

Driver / Alimentatore — Not included

100-240V	48V/150W/IP67/1-10V	INFINITO 12	1Z1120250

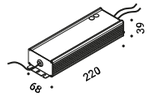

Driver / Alimentatore — Not included

100-240V	48V/240W/IP67/1-10V	INFINITO 18	1Z1120390

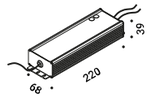

Driver / Alimentatore — Not included

100-240V	24V/120W/IP67/1-10V	INFINITO 5 TW / INFINITO 10 TW	1Z1120240

The sizes are expressed in millimeters.

Compulsory accessories / Accessori obbligatori

Drivers / Alimentatori

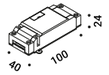

Controller — Not included

	DALI - PUSH - 0/1-10V - TRIAC - IP20	INFINITO 6 / INFINITO 12 / INFINITO 18	1Z2170010

Controller Casambi - Tunable White — Not included

	INFINITO 5 TW / INFINITO 10 TW	1Z2360010

Optional accessories / Accessori opzionali

Installation kits / Kit d'installazione

Spacer / Distanziale — Not included

Matt White	For driver kit with plug	INFINITO 6 / INFINITO 12	1A4930300.00.00
Matt Black	For driver kit with plug	INFINITO 6 / INFINITO 12	1A4930400.00.00

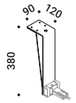

Ceiling installation kit / Kit d'installazione da soffitto — Not included

Matt White	1A0080300.00.00
Matt Black	1A0080400.00.00

Kit wall connection vertical sloped 45° / Kit attacco da parete per inclinazione verticale 45° — Not included

Matt White	1A0120300.00.00
Matt Black	1A0120400.00.00

Kit wall connection sloped right 75° / Kit attacco da parete per inclinazione 75° destro — Not included

Matt White	1A0340300.00.00
Matt Black	1A0340400.00.00

Kit wall connection sloped left 75° / Kit attacco da parete per inclinazione 75° sinistro — Not included

Matt White	1A0350300.00.00
Matt Black	1A0350400.00.00

Swallows / Rondini — Not included

Matt Black	1A0290400.00.00

Davide Groppi / 2016

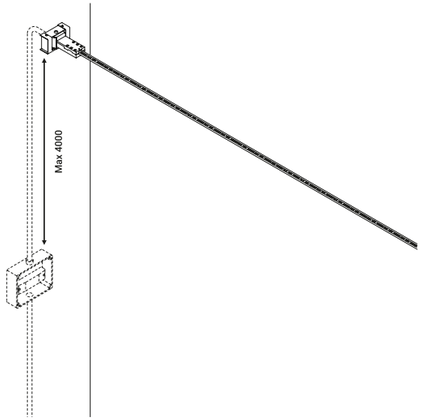

Example of installation with remote driver

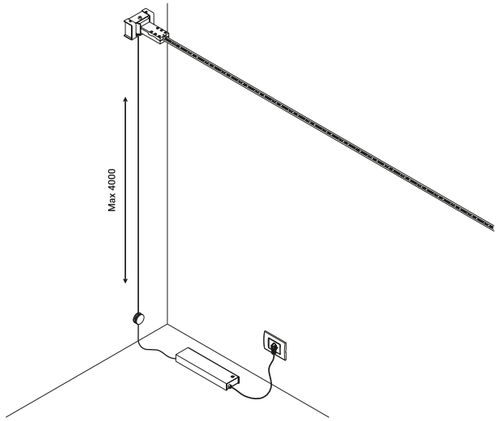

Example of installation with driver with plug

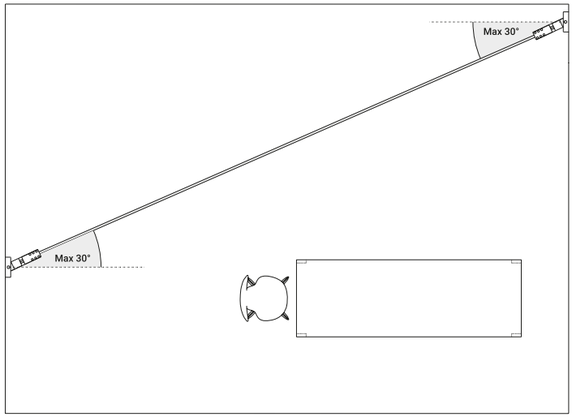

Example of installation with max rotation 30°

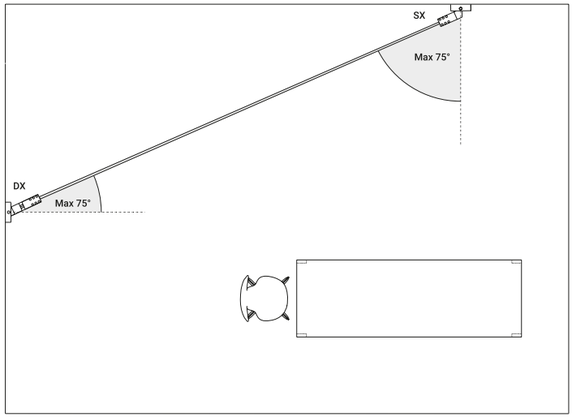

1A0340400.00.00 - 1A0350400.00.00 - Example of installation with kit wall connection sloped 75°

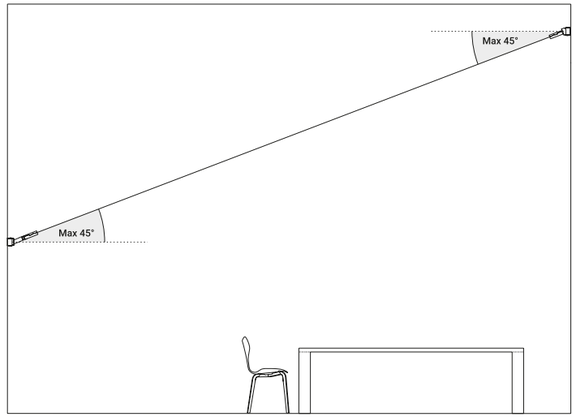

1A0120400.00.00 - Example of installation with kit wall connection vertical sloped 45°

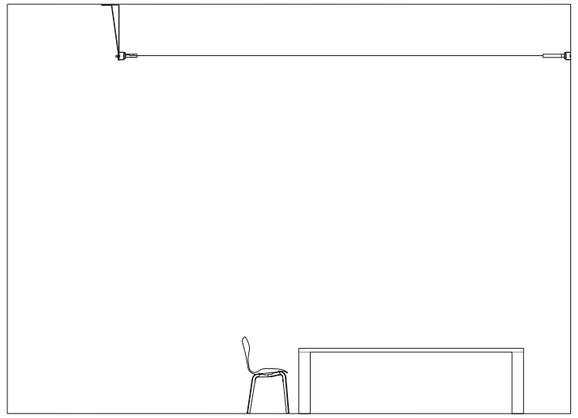

1A0080400.00.00 - Example of installation with ceiling installation kit